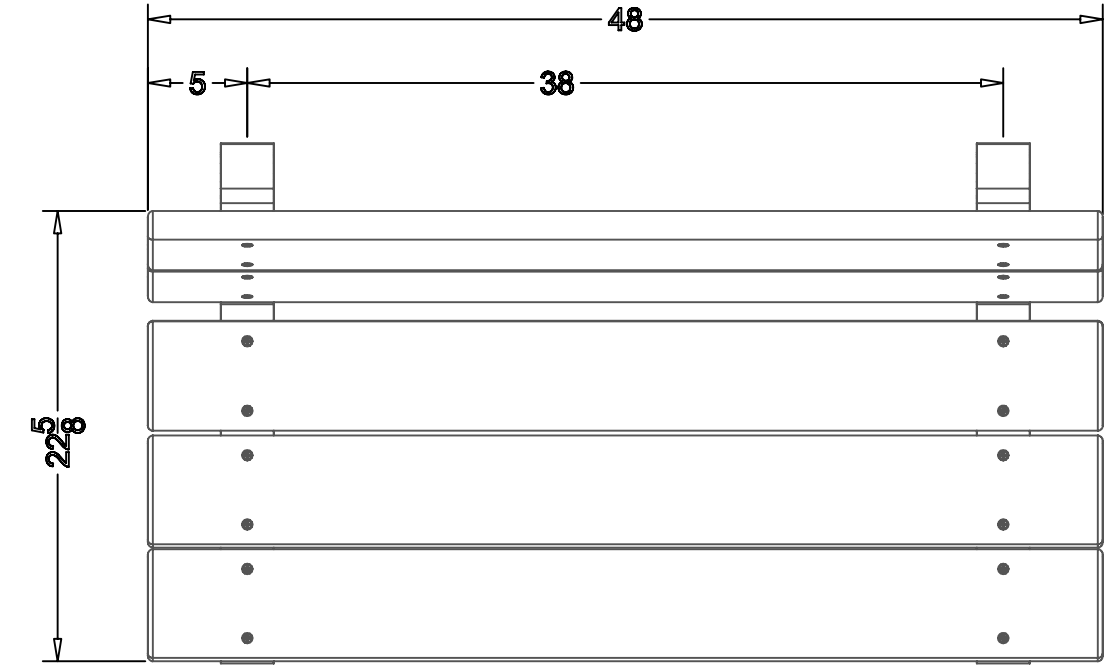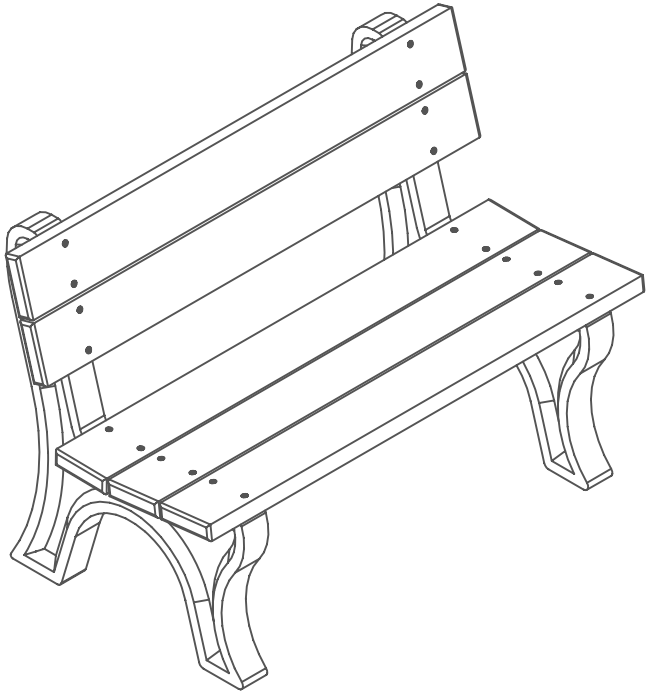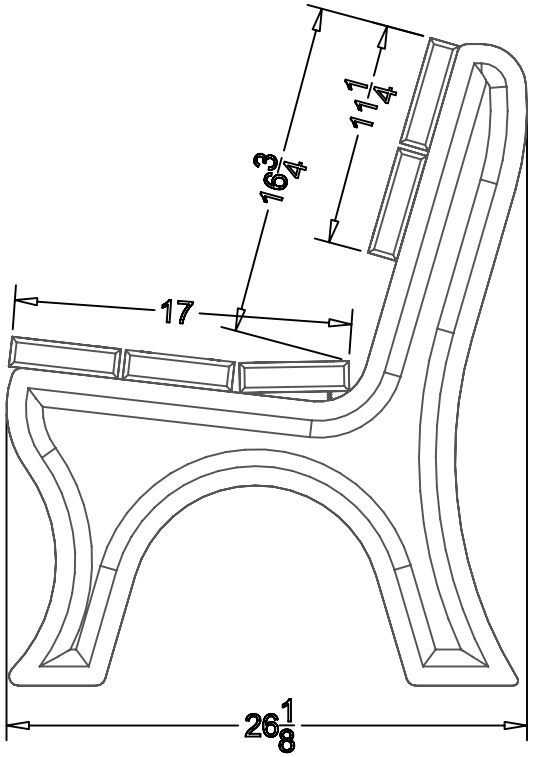ASM-VET4B