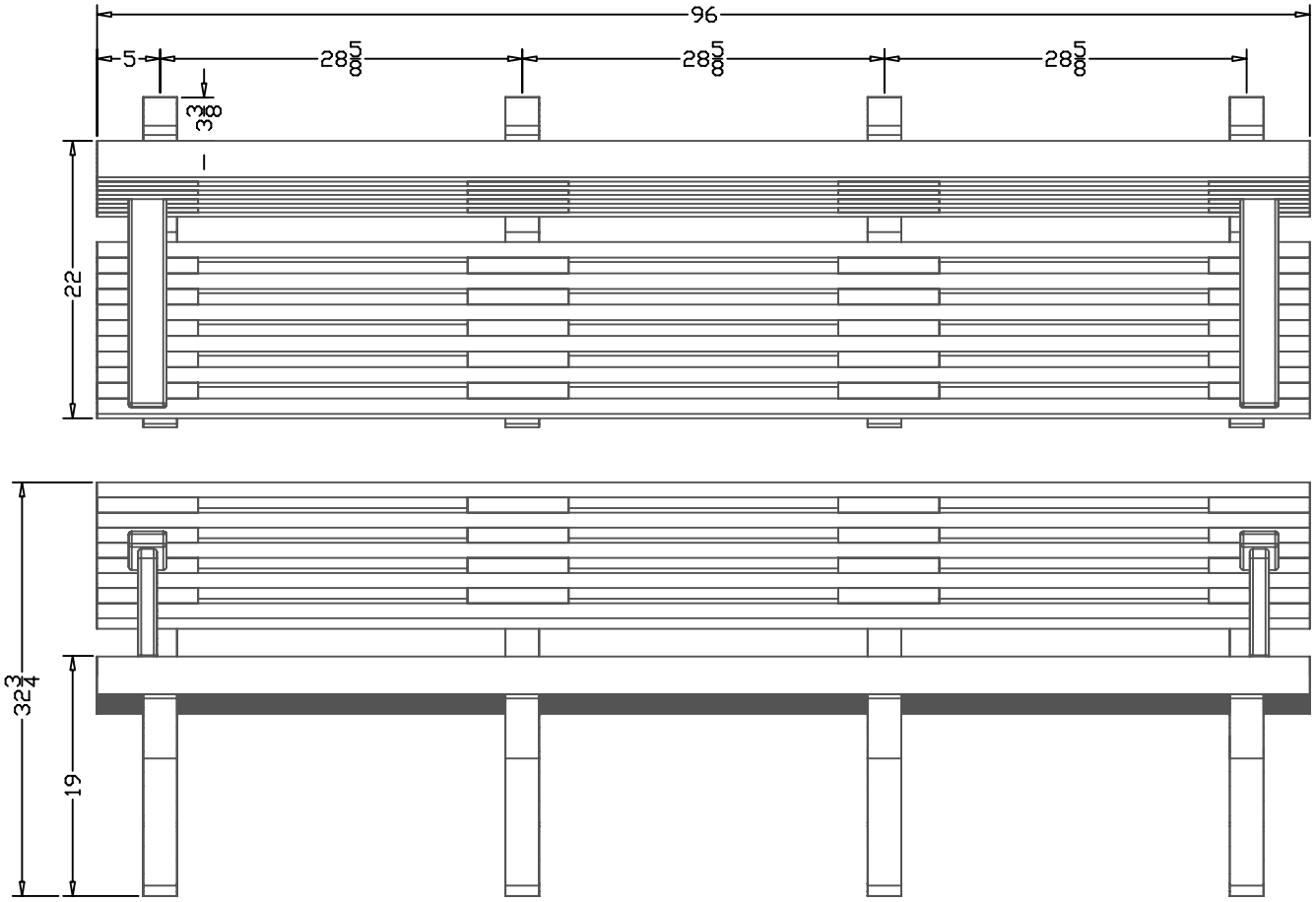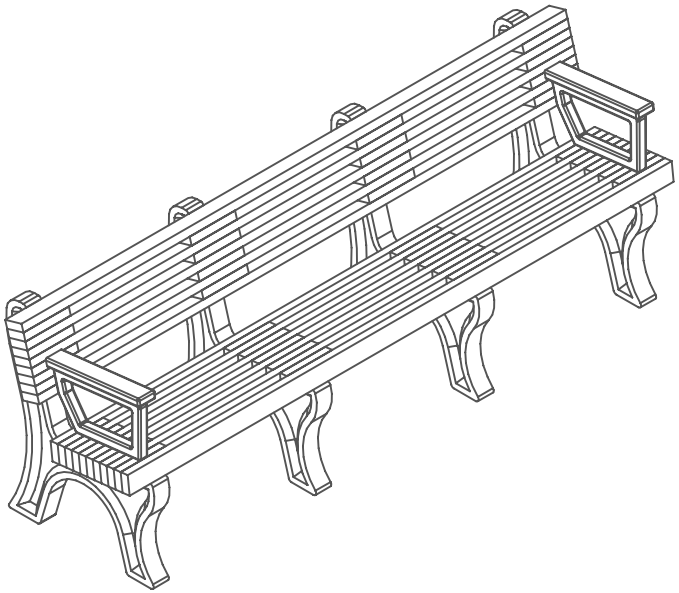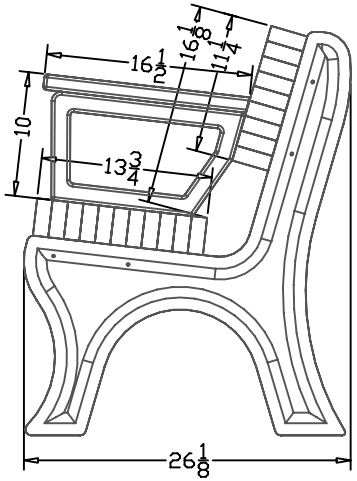ASM-EB8BA