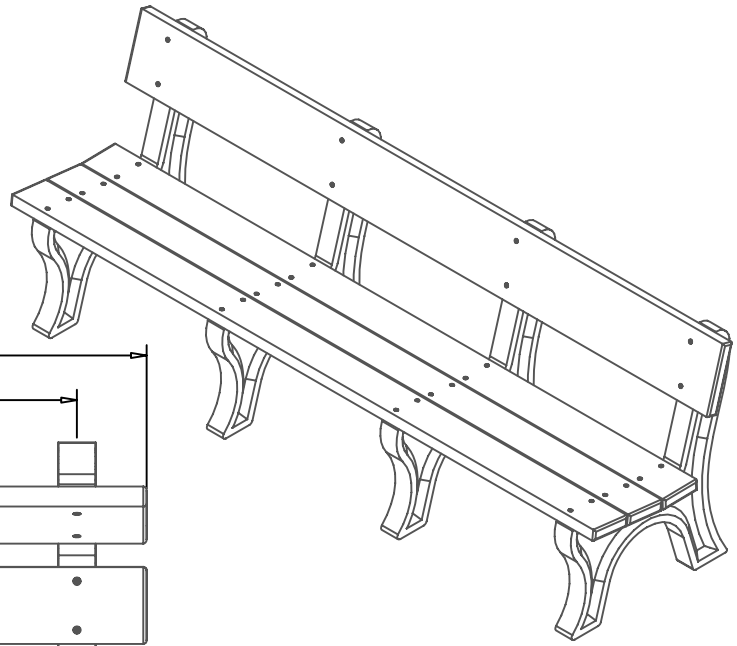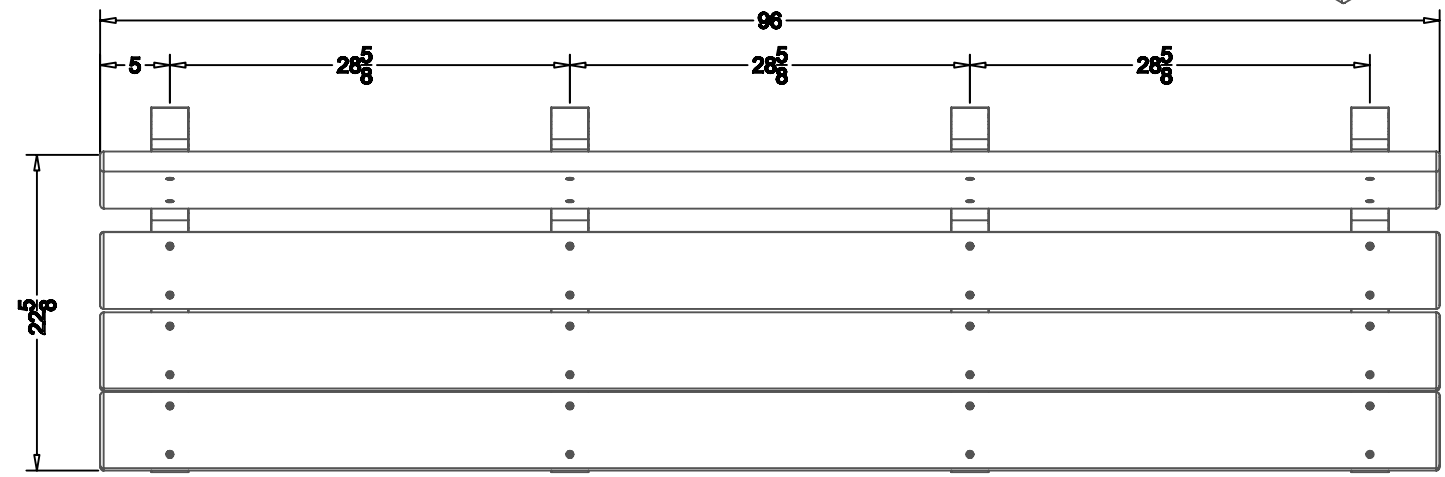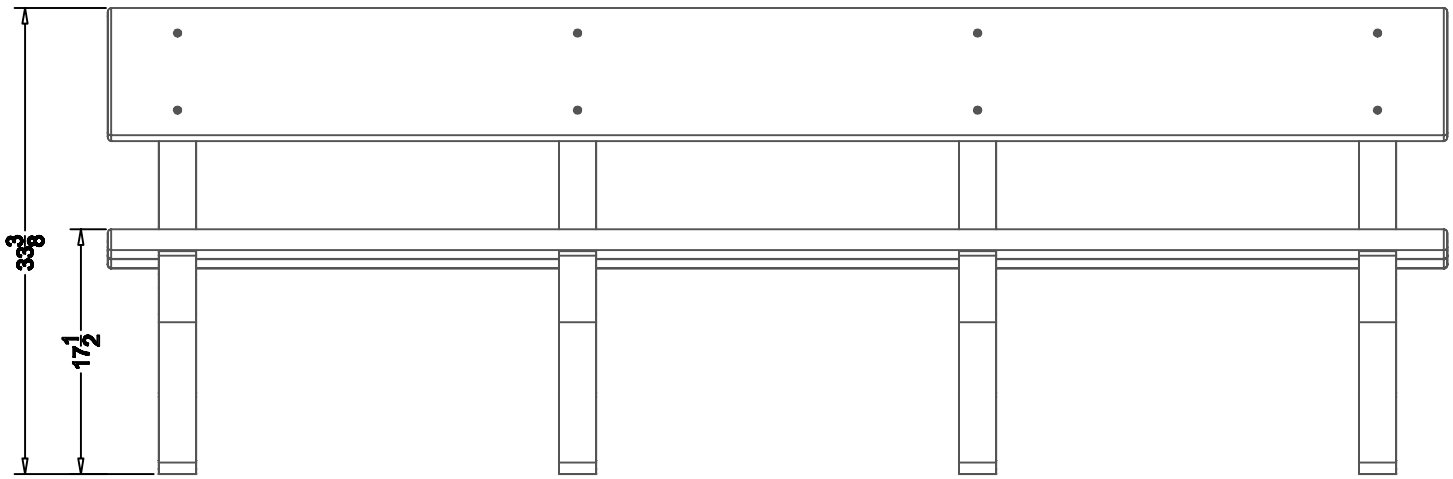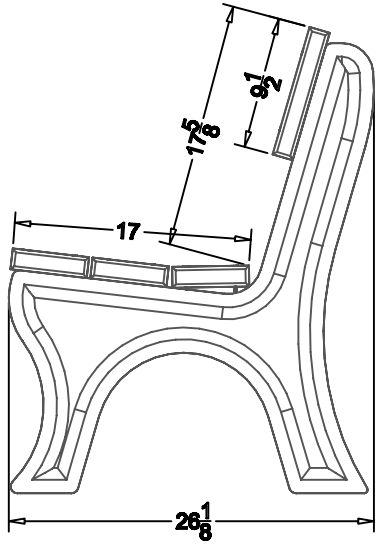ASM-LB8B-02