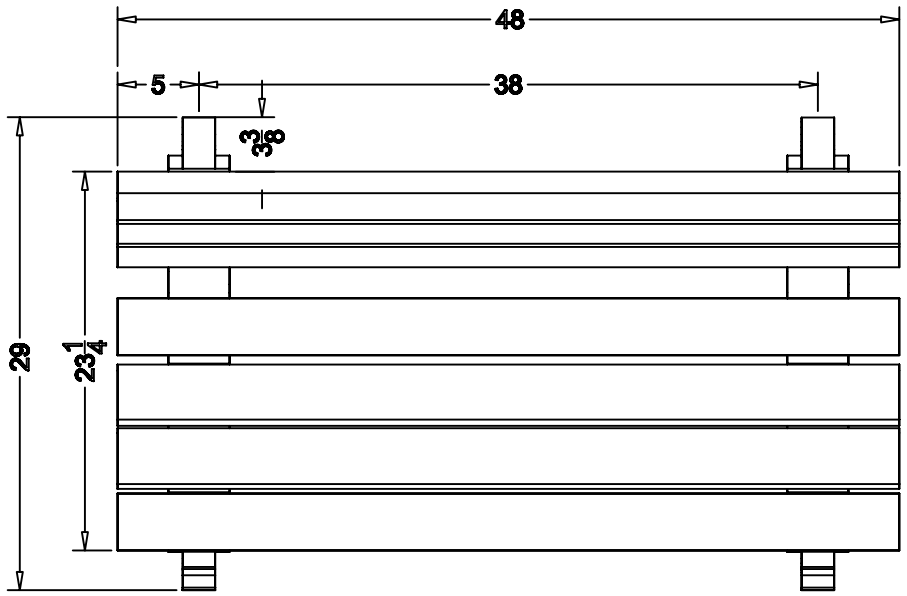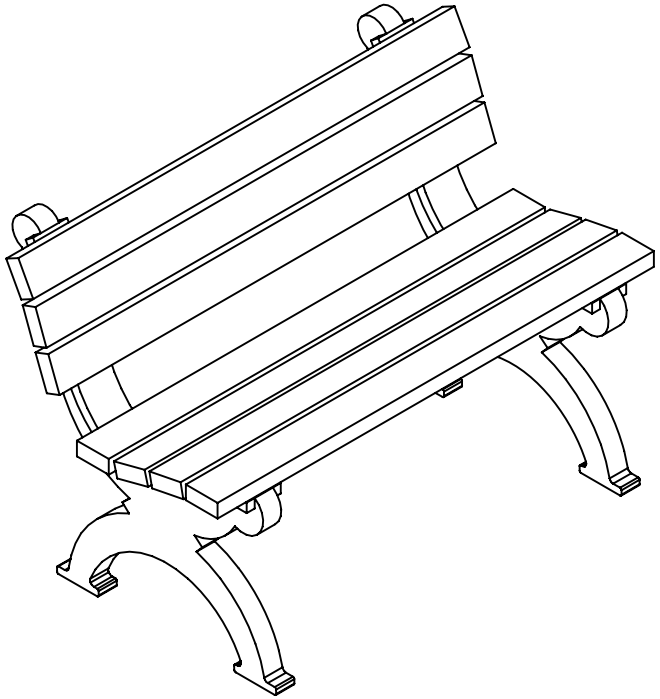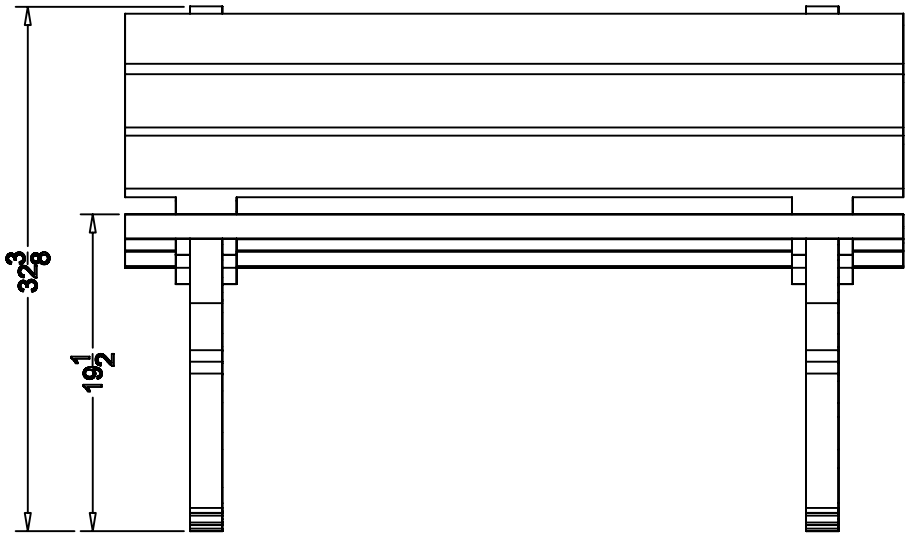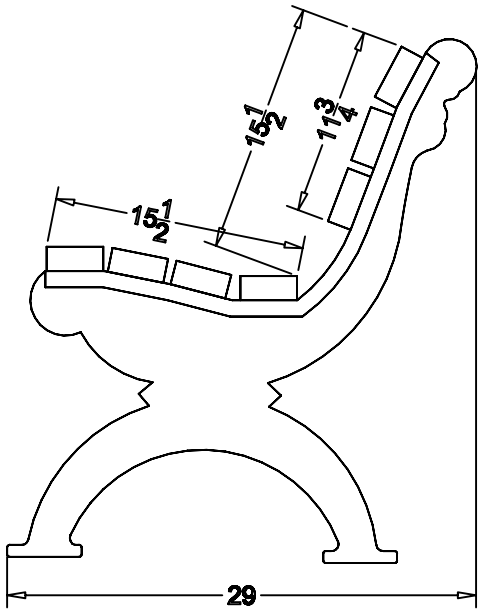ASM-MB4B-01